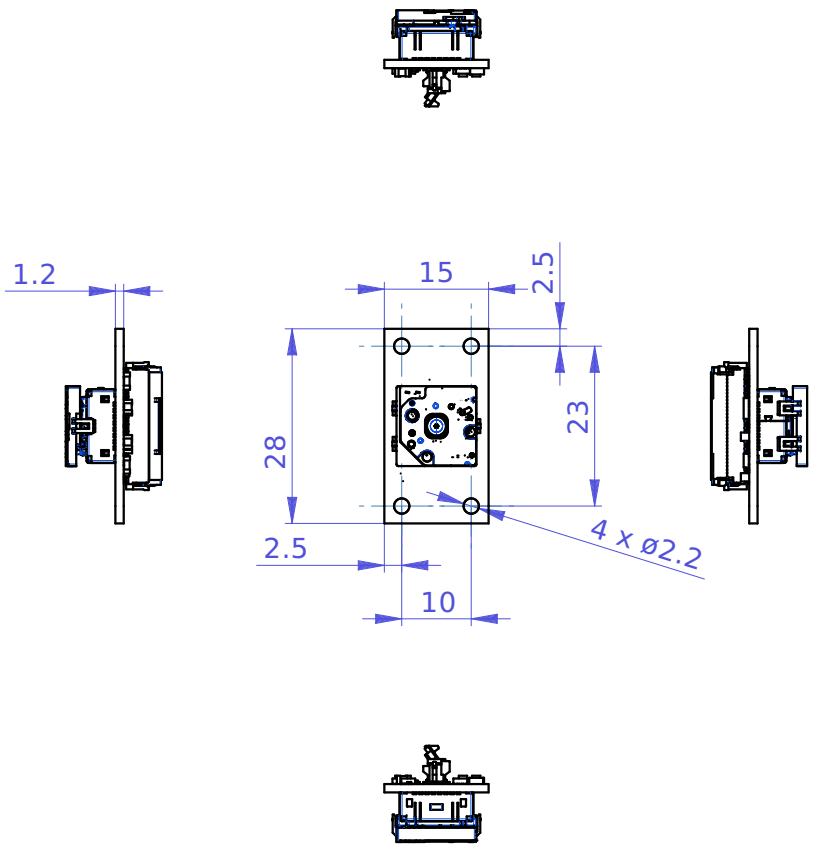

Revision	Part #	Description
0	0393-00-992	Adapter brd for FLIR Lepton-3 LWIR Sensor PCB 103992

Material		Serial No.	
Finish		Assembly No.	
Weight(g)		Date	Scale
Surface			

Copyright (c) 2018 Elphel, Inc.
Licensed under CERN OHL v.1.1 or later - see http://ohwr.org/cernohl

Permission is also granted to copy, distribute and/or modify this document under the terms of the GNU Free Documentation License, Version 1.3 or any later version published by the Free Software Foundation; with no Invariant Sections, no Front-Cover Texts, and no Back-Cover Texts. A copy of the license is included in the section entitled "GNU Free Documentation License".

Notes